1222 RANGE LIMITER

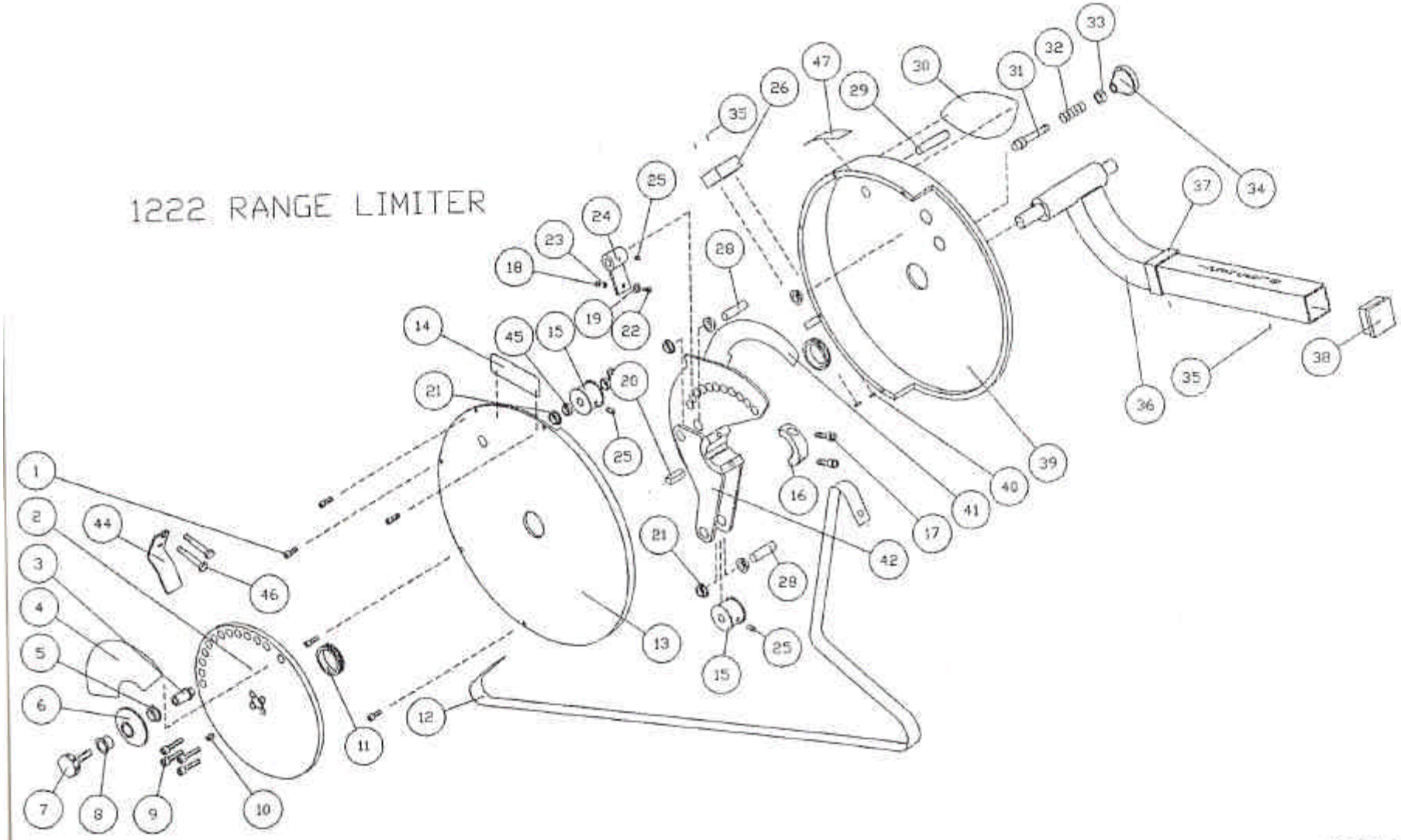

12RISD_C.DWG

Air 250 ROM Leg Curl

ITEM	PART #	DESCRIPTION		ITEM	PART #	DESCRIPTION
1	9097.00	SHCS # 10-32 x 1/2 ZP				
2	121898.33	END RANGE DISK BK				
3	112206.00	RANGE LIMITER STOP ZP				
4	125309.00	10-135 DEG CURL				
5	115056.00	FLANGE BRG - .63 ID SHORT				
6	115436.00	TAPERED RUBBER DONUT				
7	110805.00	SHORT KNOB ASSY				
8	115052.80	FLANGE BEARING - .63 I.D. ZP				
9	9098.00	SHCS 1/4-20 x 1/2				
10	121827.00	SMALL KEY				
11	115077.00	BUSHING				
12	115413.00	BELT-A250 75" RANGE LIMIT				
13	120917.32	R RANGE COVER WT				
14	125300.00	END POSITION - DECAL				
15	115034.00	ROLLER				
16	143190.33	SADDLE-C BORE BK				
17	9105.00	SHCS 5/16-24 x 7/8 BK				
18	9226.00	HX ELAS LCK NUT 5/16-18 ZP				
19	112242.73	CLAMP DISC BK				
20	121899.00	LARGE KEY				
21	115051.80	FLANGE BEARING .5 I.D. ZP				
22	9101.00	SHCS 5/16-18 x 1 GRD.8 ZP				
23	9353.00	ACFT WASHER 5/16 BK				
24	110928.33	BELT MT				
25	9030.00	SOCK SET SCR 1/4-20 x 3/8				
26	165421.00	URETHANE EX ARM STOP				
28	112160.71	SHAFT - .5 x 1.69				
29	112161.71	SHAFT - .5 x 2.31				
30	115300.00	STARTING DECAL				
31	172180.00	PLUNGER				
32	175500.00	SPRING-PLUNGER				
33	115082.00	.375 I.D. SPACER				
34	115079.00	RND BLK KNOB-FEM IN 3/8-16				
35	9285.00	PHSTS TF PHLPS # 6 x 1/2 ZP				
36	120912.31	EX ARM - RANGE LIMITER C				
37	114242.33	COLLAR				
38	115059.00	PLASTIC CAP 1 3/4 SQ				
39	120913.32	L RANGE COVER WT				
40	9247.00	HEX ELAS. LCK NUT 10-32 ZP				
41	115604.00	DECAL - POSITION				
42	120923.33	TENSION ADJUSTER BK				
44	121822.31	STOP PLATE C				
45	115078.00	SPACER				
46	9179.00	HHCS 5/16-18 x 2-1/4 ZP				
47	125603.00	DECAL - POSITION CHART				